Menu

Pratissoli

and

the new

MW

The project scopes and features of a unique new line of pumps.

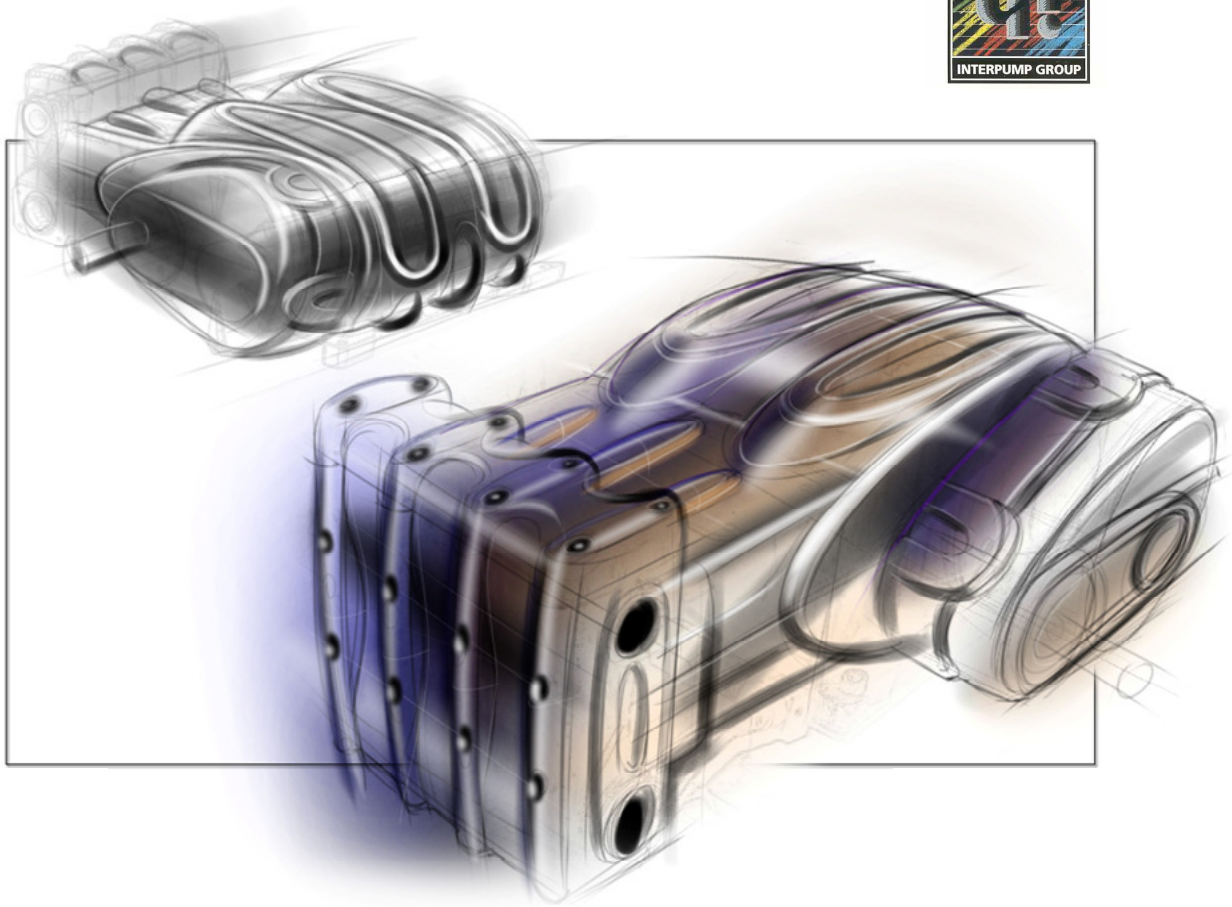

INTERPUMP GROUP

Presentation

Pratissoli

THE NEW MW

1. Presentation 1/4

2. Scope of the project

2.a. Increase volumetric efficiency

2.b. Increase life time

2.c. Reduce noise level

2.d. Interchangeability

3. Options

In the course of the fourth quarter 2010 the MS pump will be phased out and replaced by the new MW line.

The MW line combines years of reliable pump design with the latest in technological advances, the result was a modern pump that promised long life, minimal downtime and greatly reduced operating cost.

Pratissoli

THE NEW MW

1. Presentation 2/4

2. Scope of the project

2.a. Increase volumetric efficiency

2.b. Increase life time

2.c. Reduce noise level

2.d. Interchangeability

3. Options

MW vs. MS
in numbers

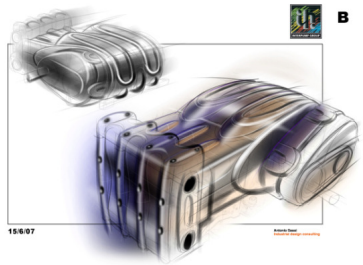

MW series 100 HP

- *Introduced a longer stroke, now 70 mm. instead of 60 mm.*
- *Introduced the plunger Ø 32 mm.*
- *MW55 flow rate is now 400 liters/min.*
- *Gear ratios: 1500 – 1800 – 2200 rpm*
- *Lighter weight, less 20 Kg. when compared to the MS.*

Model	Portata Volume Débit	Riduttore—Gear box Reducteur A 1500 rpm R=1:1,875	B 1800 rpm R=1:2,238	C 2200 rpm R=1:2,722	Pressione Pressure Pression		Potenza Power Puissance	
MW 32	l/m gpm	136 35,9			bar psi	300 4350	HP Kw	106 78
MW 36	l/m gpm	172 45,4			bar psi	240 3500	HP Kw	108 79,4
MW 40	l/m gpm	213 56,3			bar psi	190 2750	HP Kw	105 77,2

Corsa *Stroke* Course	:70 mm.
Battente max *Max inlet pressure* Pression alim. maxi	: 3 bar (45 psi)
Quantità olio *Oil capacity* Quantité huille	: lt.9
Peso *Weight* Poids	: Kg.244

Model	Portata Volume Débit	Riduttore—Gear box Reducteur A 1500 rpm R=1:1,875	B 1800 rpm R=1:2,238	C 2200 rpm R=1:2,722	Pressione Pressure Pression		Potenza Power Puissance	
MW 45	l/m gpm	269 71,1			bar psi	155 2250	HP Kw	109 79,8
MW 50	l/m gpm	333 88			bar psi	125 1800	HP Kw	108 79,5
MW 55	l/m gpm	402 106,5			bar psi	100 1450	HP Kw	104 76,8

Corsa *Stroke* Course	:70 mm.
Battente max *Max inlet pressure* Pression alim. maxi	: 3 bar (45 psi)
Quantità olio *Oil capacity* Quantité huille	: lt.9
Peso *Weight* Poids	: Kg.245

*Crankshaft speed:*A 1500 = 800 rpm B 1800 = 804 rpm C 2200 = 808 rpm
Volumes are theoretical at 100% volumetric efficiency

Pratissoli

THE NEW MW

1. Presentation 3/4

2. Scope of the project

2.a. Increase volumetric efficiency

2.b. Increase life time

2.c. Reduce noise level

2.d. Interchangeability

3. Options

In order to improve volumetric efficiency two new fluid ends have been designed:

- H.P. above 155 bar up to 300 bar

- L.P. up to 155 bar

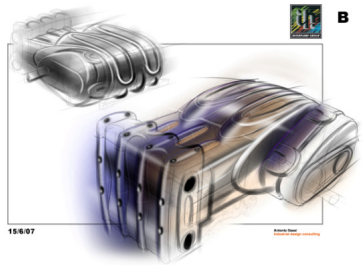

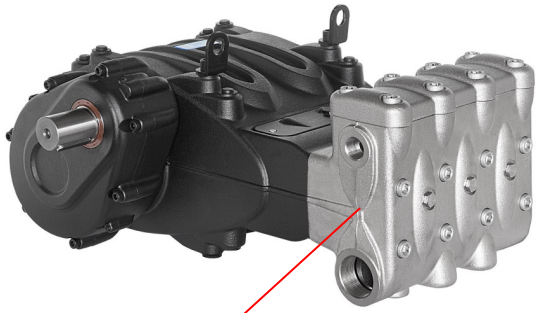

H.P. fluid end

L.P. fluid end

The drain valve kits come standard with any MW.

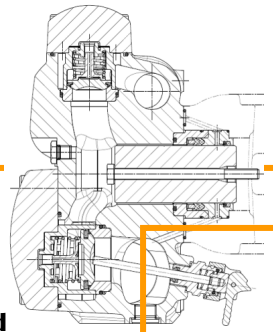

L.P. fluid end

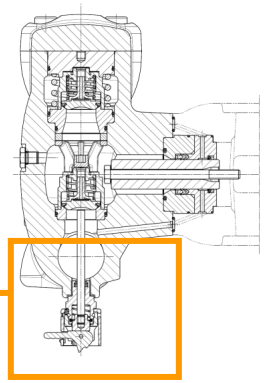

H.P. fluid end

Pratissoli

THE NEW MW

1. Presentation 4/4

2. Scope of the project

2.a. Increase volumetric efficiency

2.b. Increase life time

2.c. Reduce noise level

2.d. Interchangeability

3. Options

SYMETRICAL CRANKCASE DESIGN featuring both top and bottom mounting holes that allow for easy "left to right" shaft conversion in few simple steps:

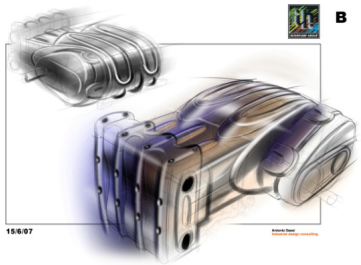

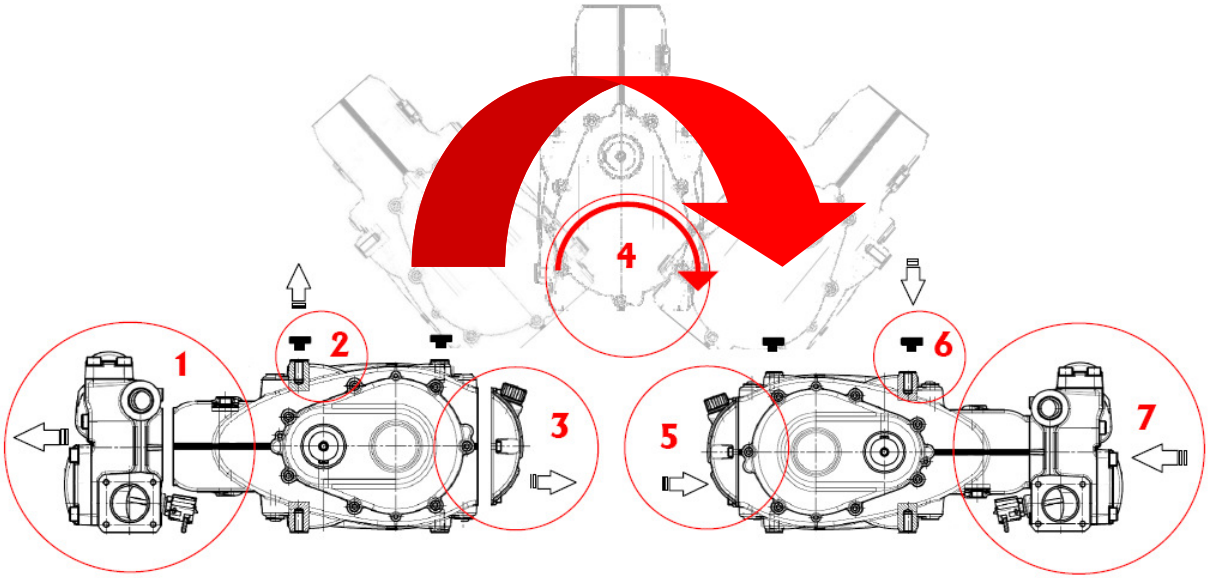

1. ***Remove head from the pump***
2. ***Remove feet caps***
3. ***Oil drain, then remove back cover***
4. ***Turn the pump upside-down***
5. ***Back cover back in place***
6. ***Feet caps back in place***
7. ***Head back in place.***

Pratissoli

THE NEW MW

1. Presentation

2. Scope of the project

2.a. Increase volumetric efficiency

2.b. Increase life time

2.c. Reduce noise level

2.d. Interchangeability

3. Options

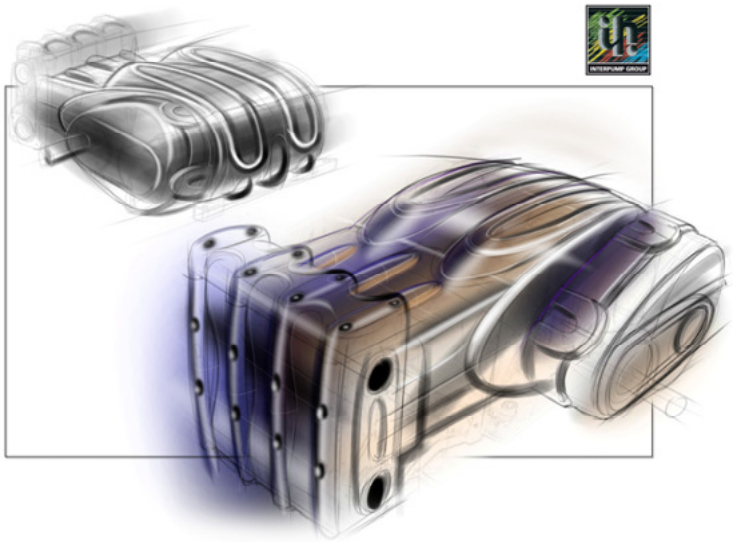

a) Further increase volumetric efficiency and, at the same time, minimise cavitation risks.

b) Further increase life time of wearing parts (minimizing down times and spare parts expenses).

c) Reduce noise level.

d) Interchangeability with the MS pumps with minor modifications.

Pratissoli

THE NEW MW

1. Presentation
2. Scope of the project
   - 2.a. Increase volumetric efficiency
   - 2.b. Increase life time
   - 2.c. Reduce noise level
   - 2.d. Interchangeability
3. Options

Suction-delivery valves innovative design allows the volumetric efficiency to exceed 92% up to 95% depending on plunger size.

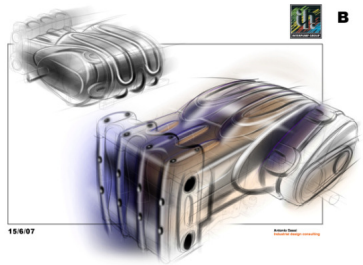

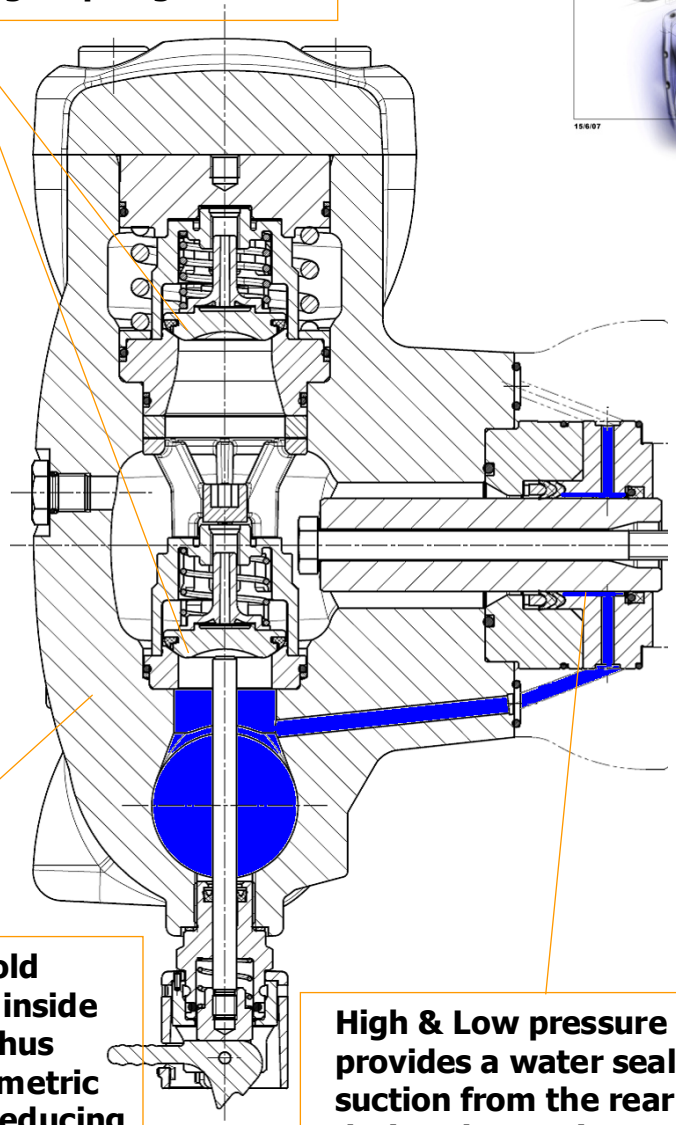

Valve assembly

The new manifold design reduces inside dead volumes thus increasing volumetric efficiency and reducing the risk of cavitation.

High & Low pressure packing design provides a water seal against air suction from the rear of the cylinder during the suction stroke.

Pratissoli

THE NEW MW

1. Presentation
2. Scope of the project
   - 2.a. Increase volumetric efficiency
   - 2.b. Increase life time
   - 2.c. Reduce noise level
   - 2.d. Interchangeability
3. Options

The new manifold material is now AUS TEMPERING cast iron for improved resistance against cavitation and wash out effects

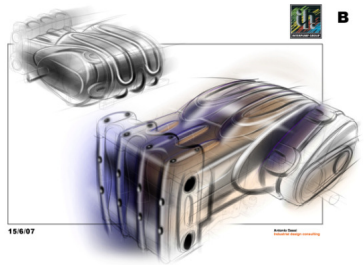

Solid ceramic plungers come standard with any MW version

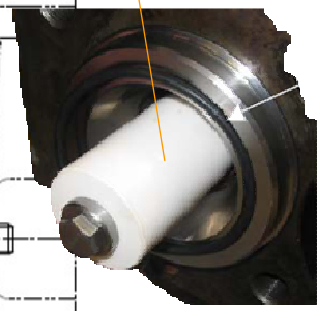

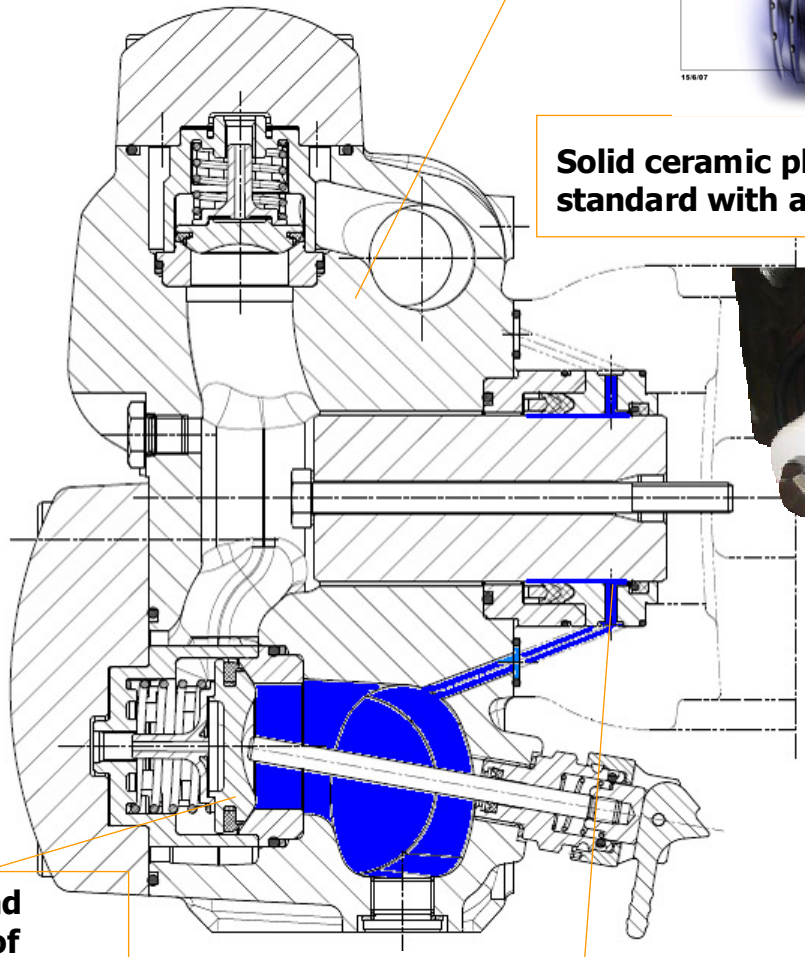

The round pattern of sealing areas extend life of both valve disks and valve seats.

Pressure packings are lubricated by inlet water, resulting in a longer packings and plungers life due to the lower operating temperature and friction produced.

Pratissoli

THE NEW MW

1. Presentation
2. Scope of the project
   - 2.a. Increase volumetric efficiency
   - 2.b. Increase life time
   - 2.c. Reduce noise level
   - 2.d. Interchangeability
3. Options

The new manifold design reduces inside dead volumes, contributing in the noise reduction

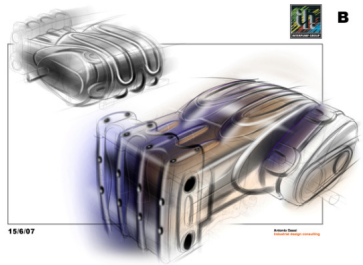

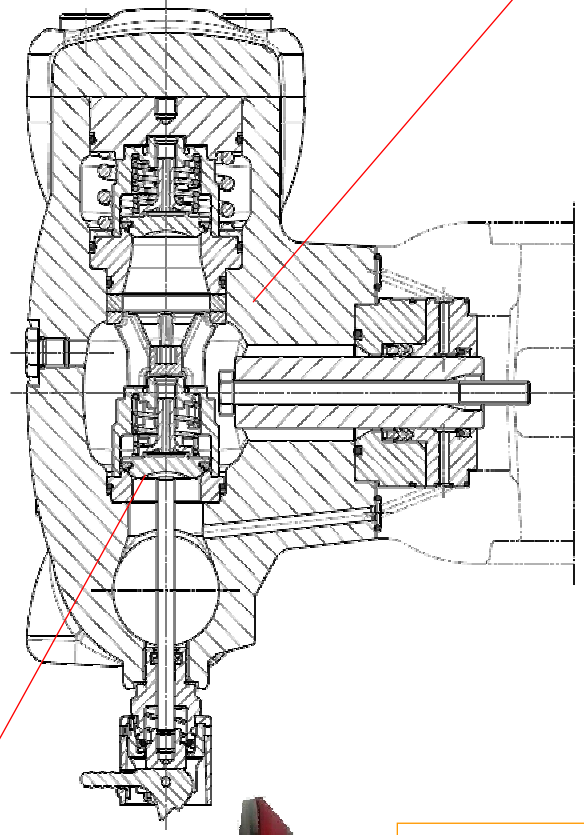

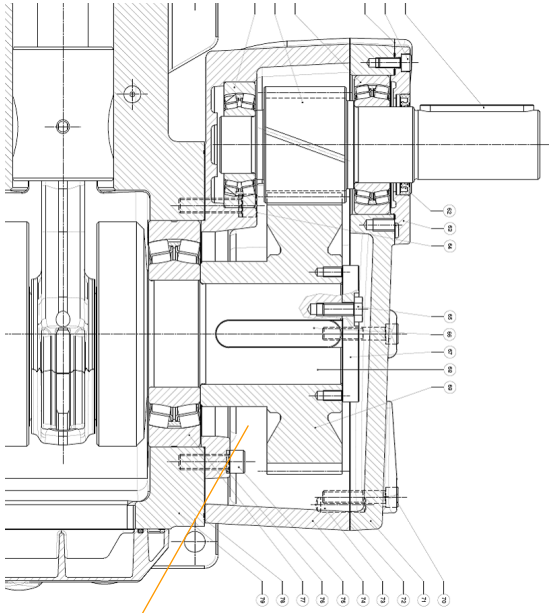

The round pattern of sealing areas and a special polymer ring included in the valve disks dampen the noise generated by the valve work.

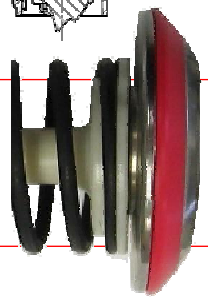

Helicoidal toothing represents a significant noise reduction in comparison to the straight toothing. Not the least, helicoidal toothing allows higher power trasmission.
Helicoidal toothing is standard for all MW's.

Pratissoli

THE NEW MW

1. Presentation
2. Scope of the project
2.a. Increase volumetric efficiency
2.b. Increase life time
2.c. Reduce noise level
2.d. Interchangeability
3. Options

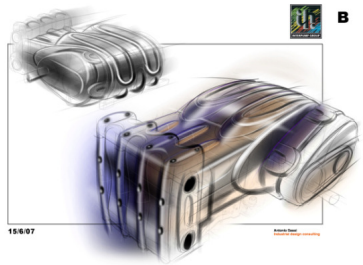

The MW is provided with a double mounting pattern. The red coloured pattern is the designed one, the blue coloured one is meant for the installation of retrofit brackets to match with the MS mount pattern. The retrofit brackets are supplied optional with the kit 2152 to make the MW perfectly interchangeable with the MS.

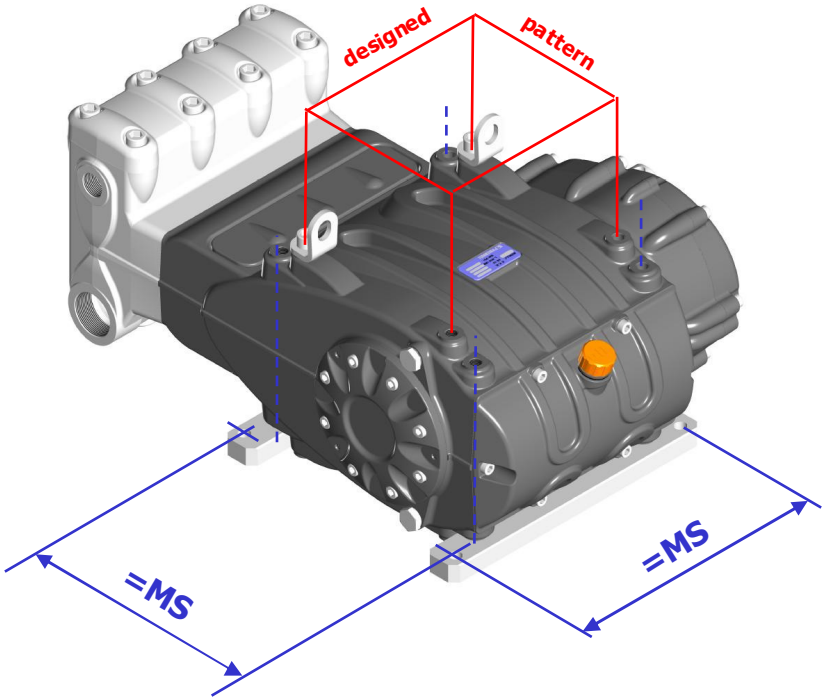

Pratissoli

THE NEW MW

1. Presentation
2. Scope of the project
2.a. Increase volumetric efficiency
2.b. Increase life time
2.c. Reduce noise level
2.d. Interchangeability
3. Options 1/2

A number of optional configurations are available, most options are cumulative and can be provided in the same pump.

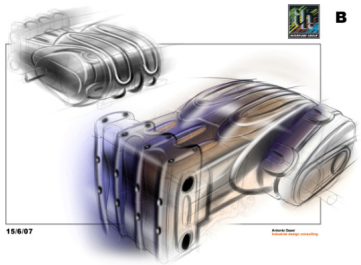

R (MW-R)

Suitable for charged water with particles size up to 200 microns and up to 20% concentration in the water.

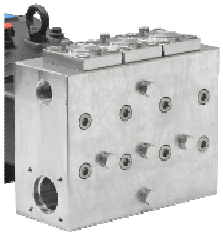

N (MW-N)

Block style duplex s.s. manifold designed for heavy duty applications in the food, chemical, pharmaceutical industries, such as reverse osmosis, purification, injection, processing and more.

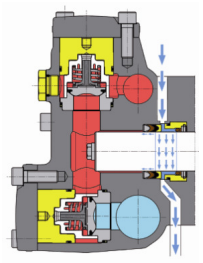

F (MW-F)

The MW line can be supplied with a flushing system in order to increase the life of pressure packings when pumping aggressive, high temperature, abrasive or low lubricant fluids.

G (MW-G)

The MW's can be arranged for pumping ethylene and polyethylene glycols up to 40°C at any concentration and pressures.

SAE J744 127-4; 32-4 hydraulic coupling

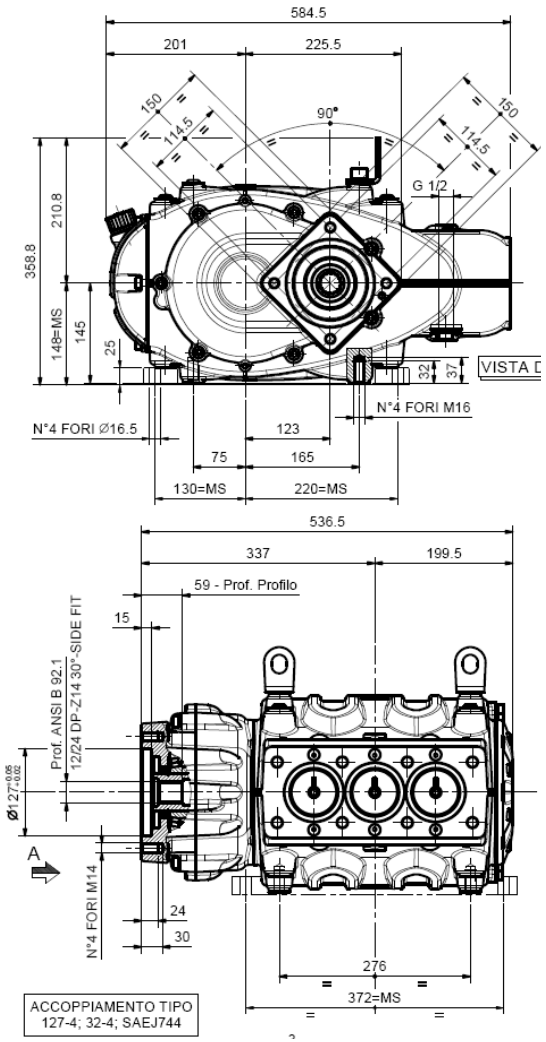

Auxiliary power take off, opposite to gear box

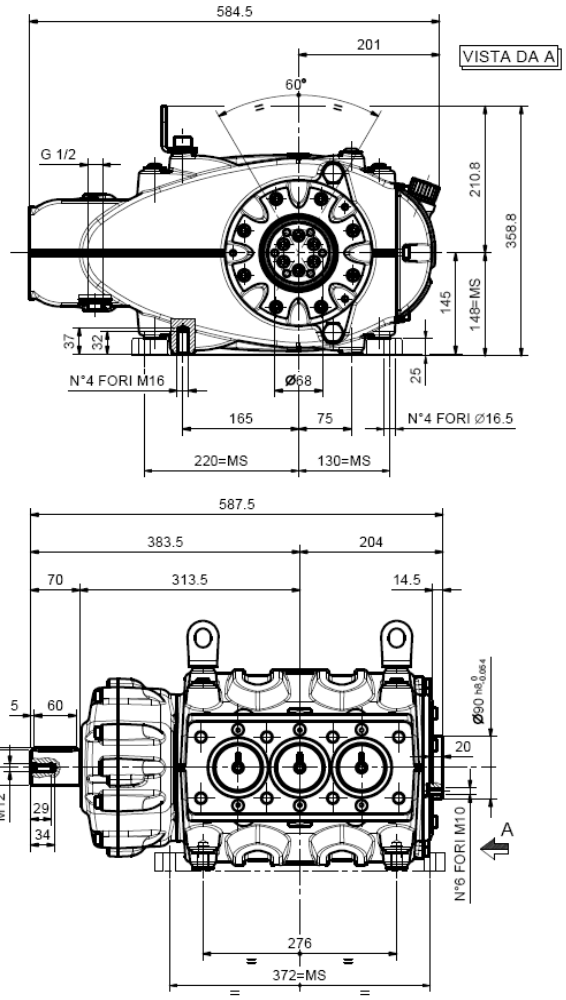

Direct drive w/o gear box

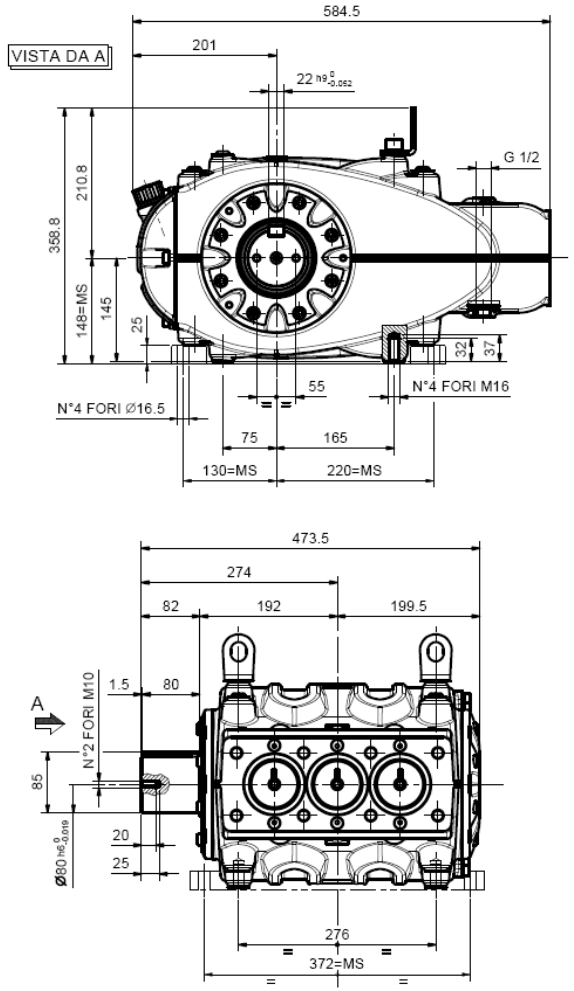

Pratissoli

THE NEW MW

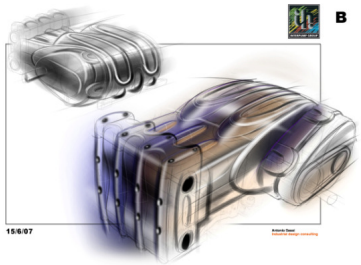

Thank you for your attention.